365

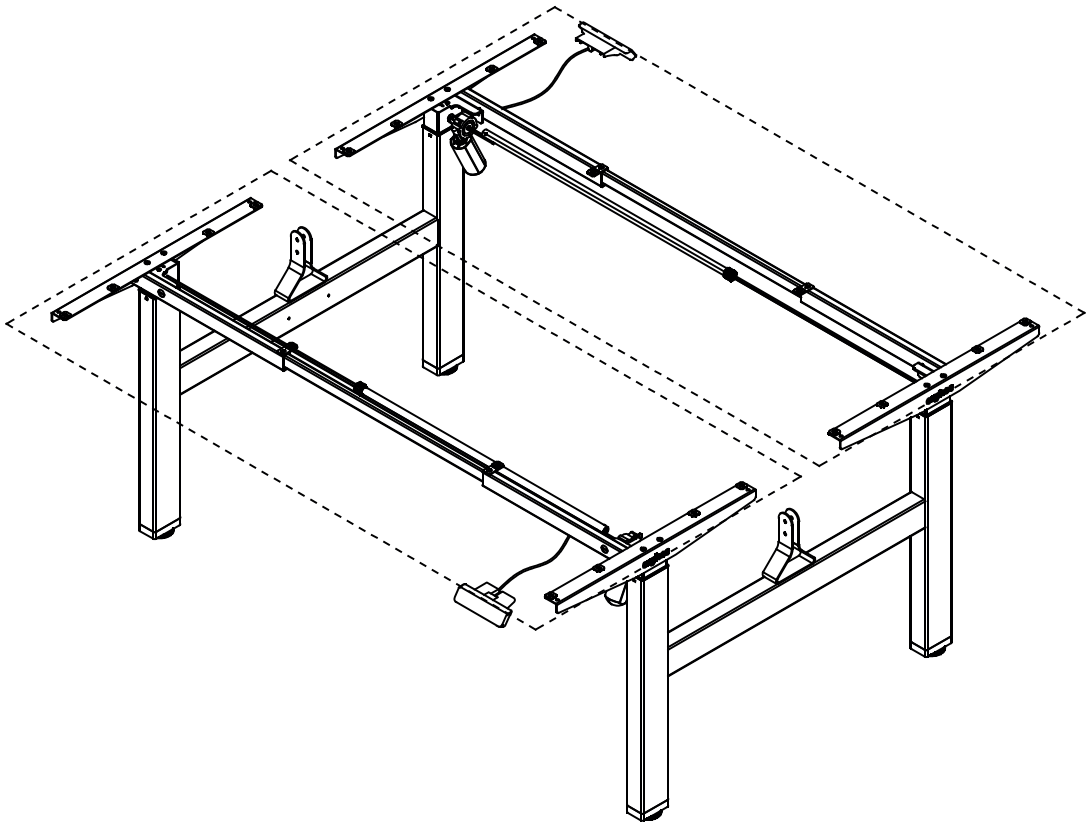

ERGHOS GO BENCH

NUMBER OF PEOPLE
X2

ASSEMBLY TIME
15 MINUTES

PLEASE ASSEMBLY
ON THE CARPET

SPECIFICATIONS

Elecrtic control part:
Input Voltage:100-240Vac 50/60Hz
Duty cycle:10%MAX 2min on 18min off

Desk frame part:
Dynamic load:80KG
The maximum static load:100KG

⚠ SAFETY WARNING

- Please read this manual carefully before use.
- The product must be connected to the correct power supply.
- For any accessories connected to the control box, the plug type and electrical characteristics must conform to its specifications.
- Indoor use only.
- If the transformer's external cable is damaged and need to be replaced,new accessory will be provided by the manufacturer or its service agent.

INSTALLATION INSTRUCTION

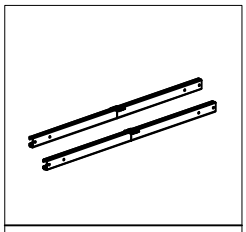

2x Long tube

①

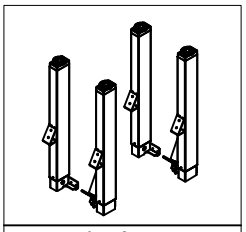

4 x Leg

②

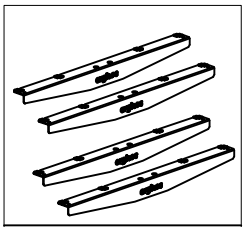

4 x Worktop Support

③

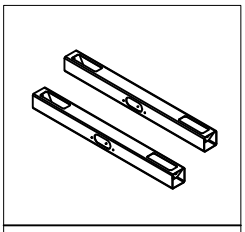

2x Cover plate

④

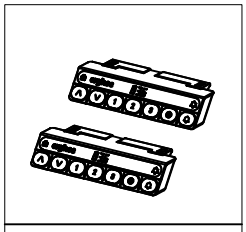

2x Handset

⑤

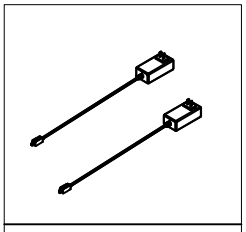

2x Power Cable

⑥

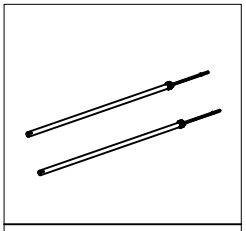

2x Hex bar

⑦

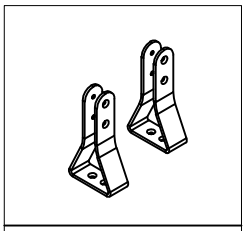

2 x Screen clip

⑧

HARDWARE INCLUDED

A	QTY:8



M6*12

B	QTY:8



M8

C	QTY:12

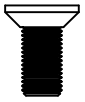

M6*10

D	QTY:4



ST4.2*13

E	QTY:12

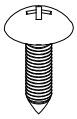

ST5.0*20

F	QTY:8



M6*20

G	QTY:4



M6

TOOLS INCLUDED



M4



M5



M6

QTY:6

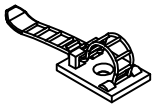

TOOLS REQUIRED

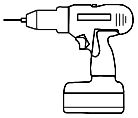

OR

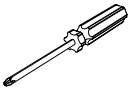

INSTALLATION INSTRUCTION

STEP 1

A QTY:8

M6*12

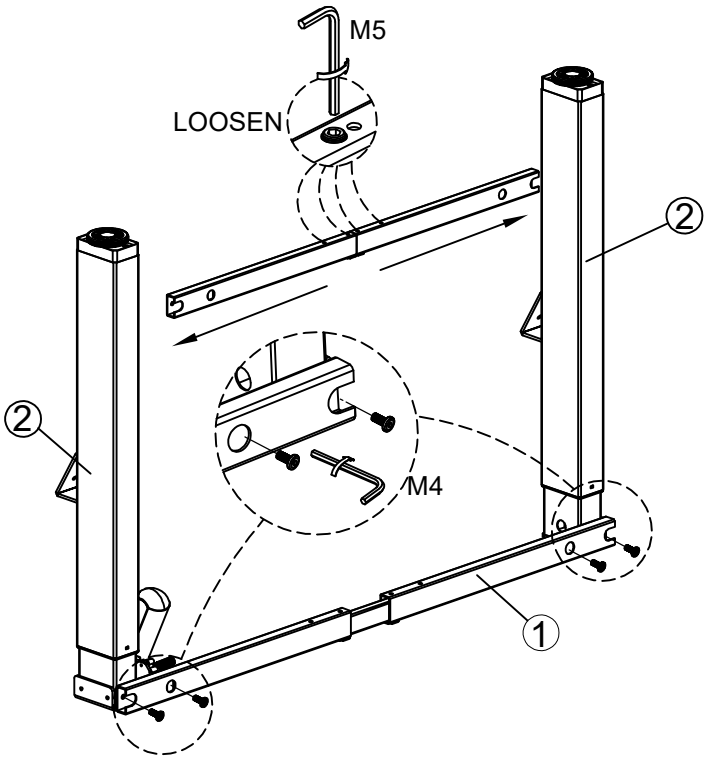

X2

STEP 2

C QTY:8
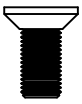
M6*10

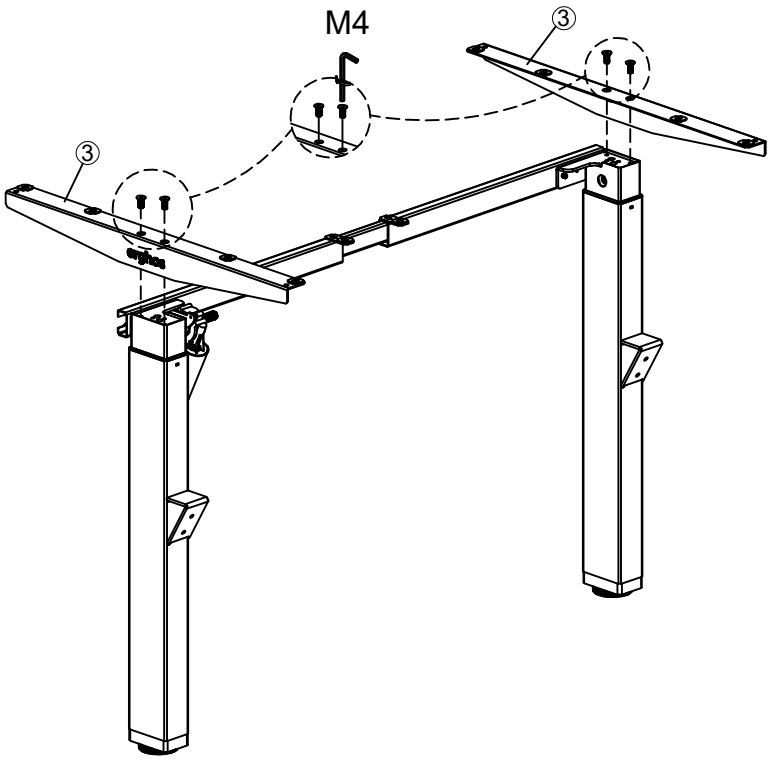

X2

INSTALLATION INSTRUCTION

STEP 3

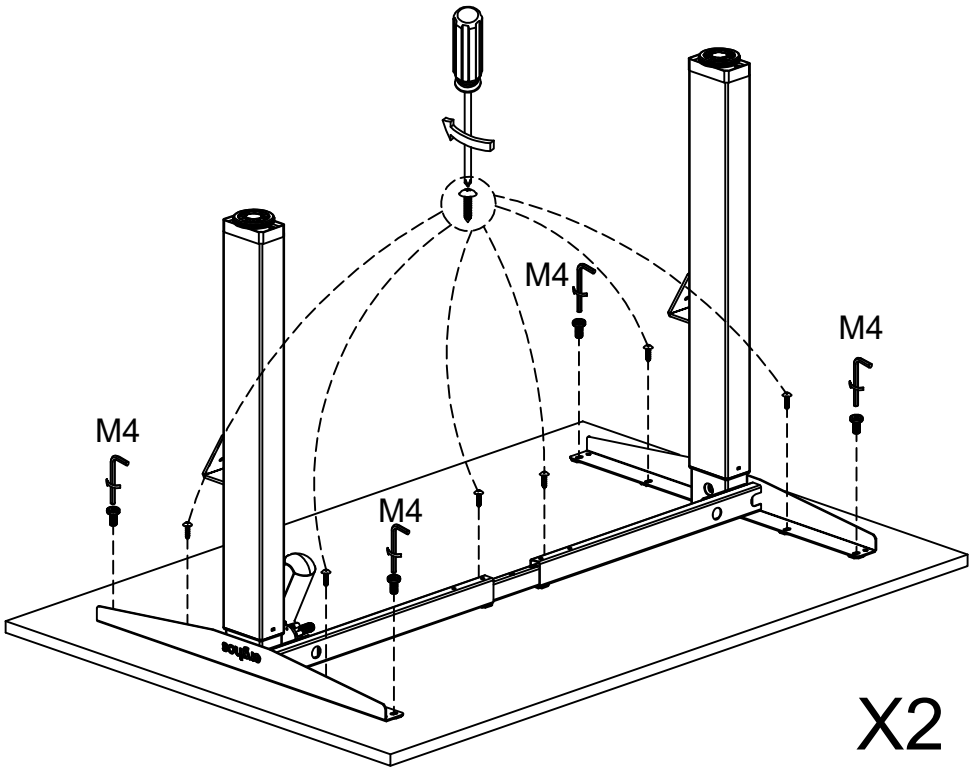

E	QTY:12

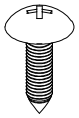

ST5.0*20

F	QTY:8



M6*20

G	QTY:8



M6

STEP 4

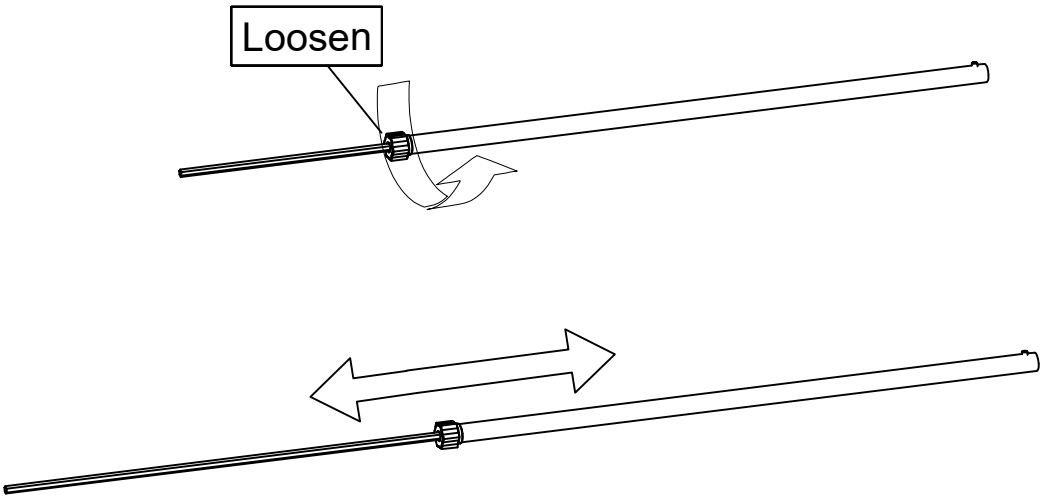

INSTALLATION INSTRUCTION

STEP 5

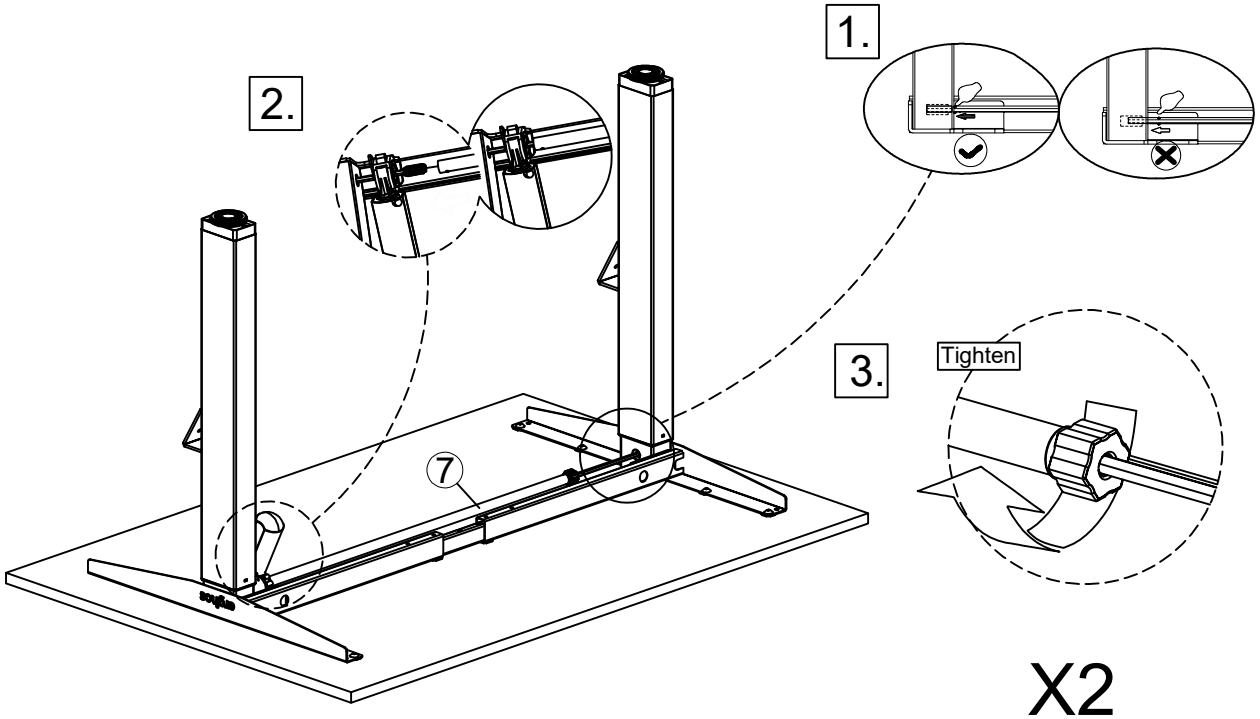

X2

STEP 6

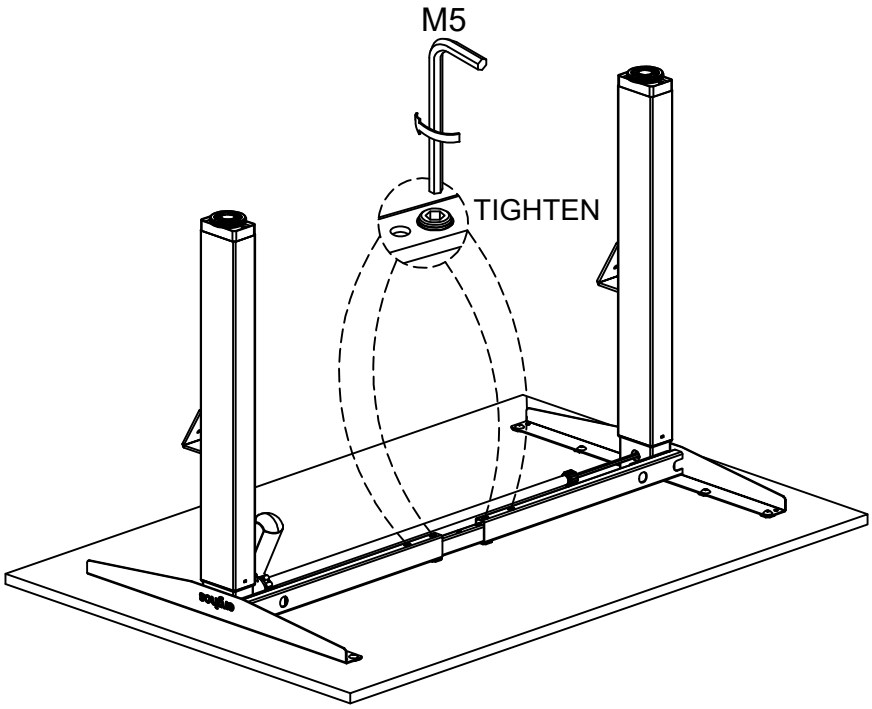

X2

INSTALLATION INSTRUCTION

STEP 7

D	QTY:4

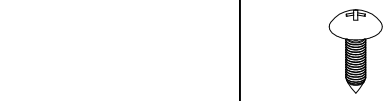

ST4.2*13

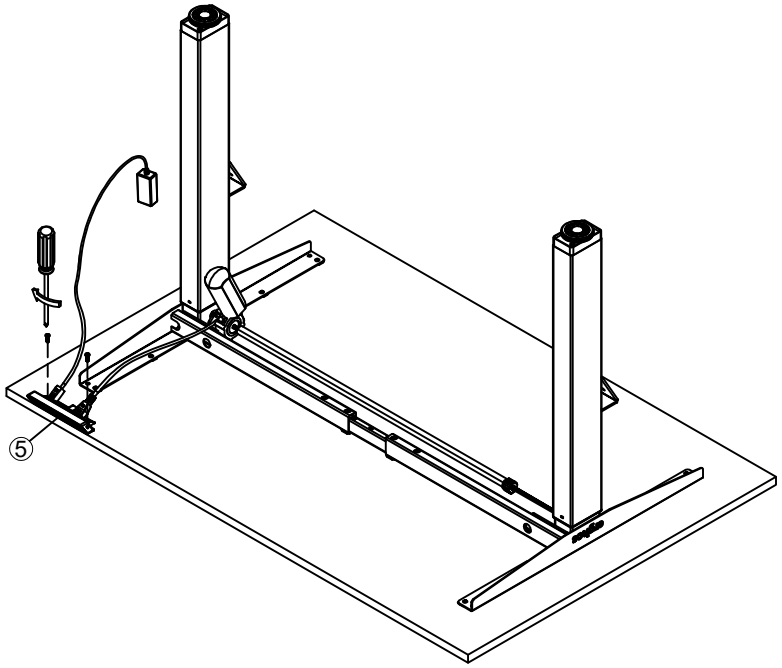

X2

STEP 8

B	QTY: 8

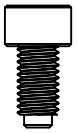

M8

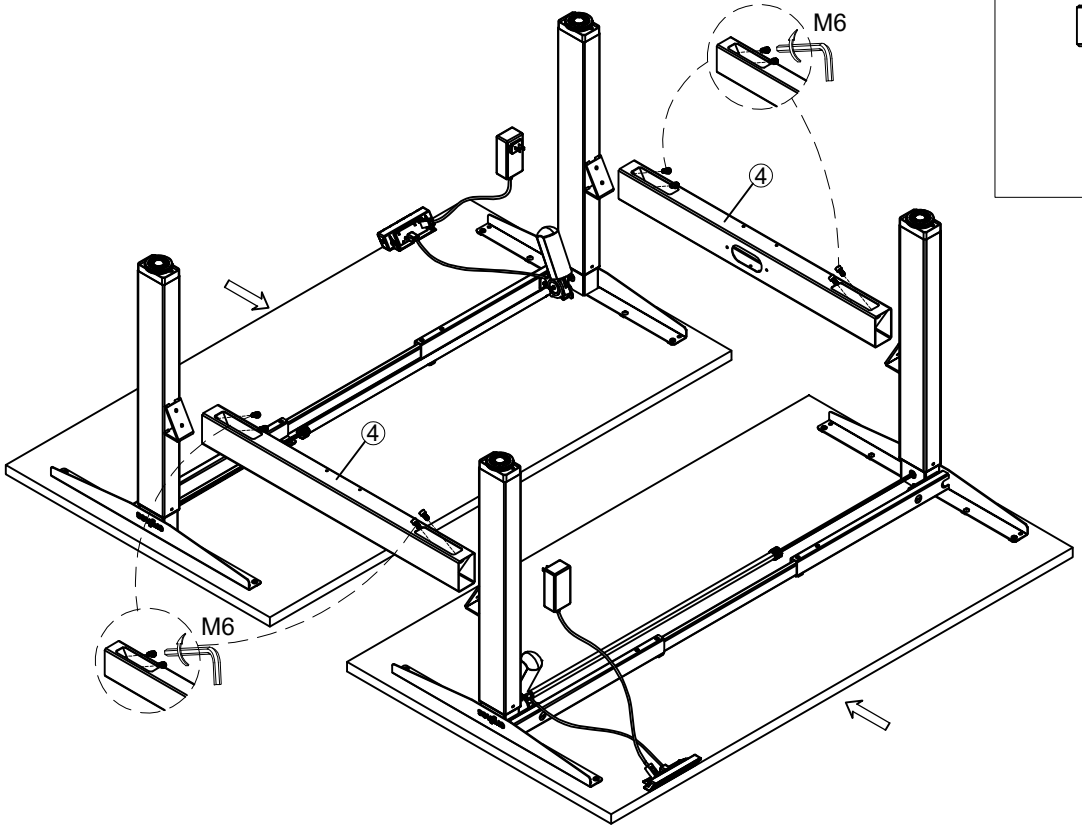

INSTALLATION INSTRUCTION

STEP 9

C	QTY:4



M6*10

STEP 10

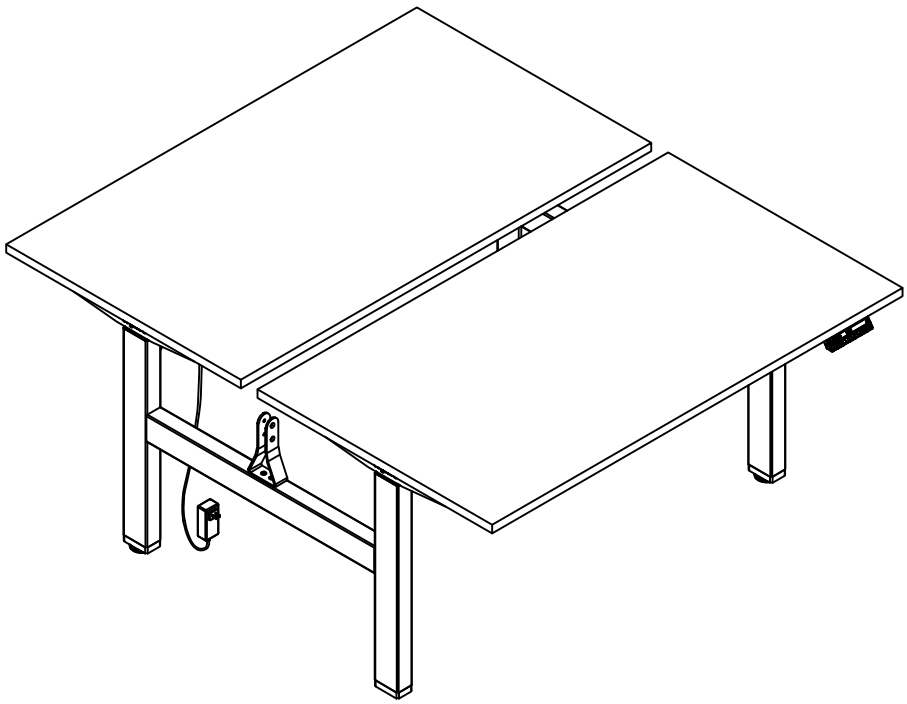

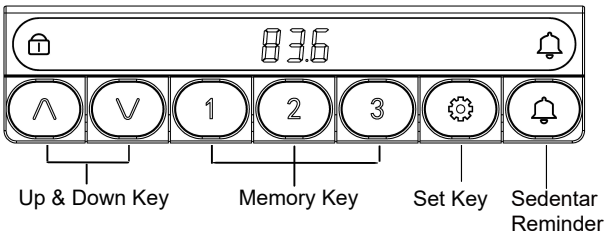

The whole handset surface is a button panel. If there is no press within 10 seconds, The handset enter a dormant state, You should press " ∧" or "∨" key to wake up , It can be used when the display screen light up.

■ Display Screen:

Display the height value of the desk.

■ Up & Down Keys:

Please keep pressing "∧" or "∨" key to adjust desk height until you get an optimum height.

■ Memory Key(1/2/3):

After setting memory keys, The desk can lift automatically to memory height.

※ How to set memory mode

Press the "⚙" key when running to a specific point. The display screen displays "S-" and "-" flashes. At this time, press "1/2/3" key to store the position to the corresponding label. the memory height is successfully saved,Then light press 1/2/3, The desk moves to memory height automatically.

■ Initialization:

1.When " RST " is on the display screen, Keep Pressing the " ∨" key until the desk frame reaches its lowest point. After hearing the " di " sound and desk frame rebounds, Initialization is completed.
(P.S. The button cannot be released during this operation, Otherwise the initialization will fail)
2.Forced initialization: Keep Pressing the " ∨" key until the desk frame reaches its lowest point, Then release the key and keep pressing it again for about 5 seconds until hear the " di " sound and desk frame rebound, The initialization is completed.
3.Restore the factory settings: When new controller is changed or the parameters need to be restored to the factory settings, Keep pressing the "∧" and " ∨ " keys simultaneously, You will hear the first " di " sound after about 5 seconds and second " di " sound after 10 seconds. When the display screen shows " RST ", Please operate refer to the No.1 item.

■ Safety Function:

When the desktop is on the rise or down, Encountered reverse resistance,The desk will rebound.

■ Handset Shows Error Code And Solution:

Error code	Fault Cause	Solution
E01, E02, E04, E06, E12, E22, E32, E15, E25, E35, E17, E27, E37, E42, E43, 888	Hardware abnormality	Contact the manufacturer for handling
E05	Obstacle rebound	Remove the obstacle
	Too high sensitivity	Reduce the sensitivity (see setting function)
	Gyroscope is triggered	Fix the control box/Handset
E07	Ineffective plug insertion	Re-plug the plug
	Overload	Reduce the desk load
E08	Gyroscope is triggered	Fix the control box/Handset
E11, E13, E21, E23, E31, E33	Abnormal connection between motor and control	Ensure correct connection
	Hardware abnormality	Contact the manufacturer for handling
E14, E24, E34	Abnormal connection between motor and control box/Handset	Re-plug the motor wire
	Overload	Hardware abnormality
	Exceed the operation stroke	Perform factory settings (see the 3rd point of initialization)
	Hardware abnormality	Contact the manufacturer for handling
E16, E18, E26, E28, E36, E38	Overload	Reduce the desk load
	Exceed the operation stroke	Perform factory settings (see the 3rd point of initialization)
	Hardware abnormality	Contact the manufacturer for handling
HOT	Over-frequency operation	Stop operating for 20 mins then it will recover automatically
RST	Reset signal	Perform the reset operation (see initialization)

DIRECTIONS FOR USE

■ Advanced Function Settings:

Limited height setting:Keep pressing "∧" and "∨" keys for 5 seconds until hear the " di " sound , Limited height setting success. (P.S. The position below half of the stroke is the lower limit position, The position above half of the stroke is the upper limit position). Cancel the function, Run to the limit height, Keep pressing "∧" and "∨" keys again for 5 seconds until hear the " di " sound, limited height cancel.

■ Lock And Unlock:

Keep pressing "∧" and "⚙" keys for 5 seconds, Screen display "🔒" , System locked up.
Keep pressing "∨" and "⚙" keys for 5 seconds, The "🔒" on the screen have disappeared ,system unlocked.

■ Sedentary Reminder:("🔔")

Press the "🔔" key, Then the screen flash 0.0h. Press the '∧ "or "∨ " key to set the time. Screen display " 🔔 ", The setting is successful.When the reminder time arrives, Buzzing sound will be emitted to give a reminder.

■ Set Key: ("⚙")

When internal parameters need to be set. Please keep pressing "⚙" key, The screen display " S-1 " after about 5 seconds, Successfully enter the setting function.

■ Setting The Anti-Collision Sensitivity:

For safety reasons, The height adjustment stops and moves back slightly when it encounters an obstacle. This rebound mechanism is triggered in sensor mode and current detection mode. These two modes complement each other to enhance the product's safety performance. However, If the sensitivity is set too high, This function may be triggered undesirably. If the function is triggered too often, You can reduce sensitivity.

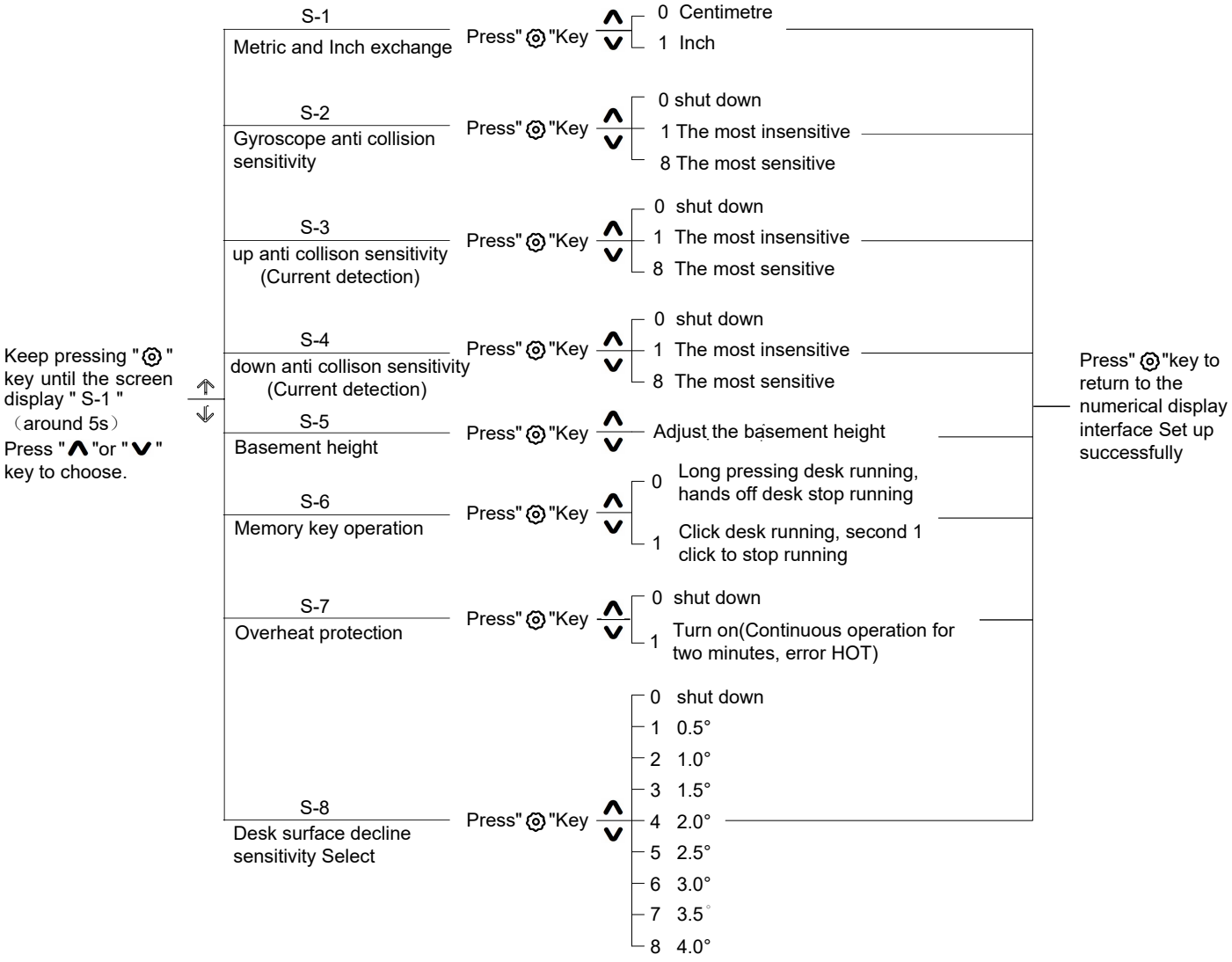

Have any questions, Please contact us.



V1