365

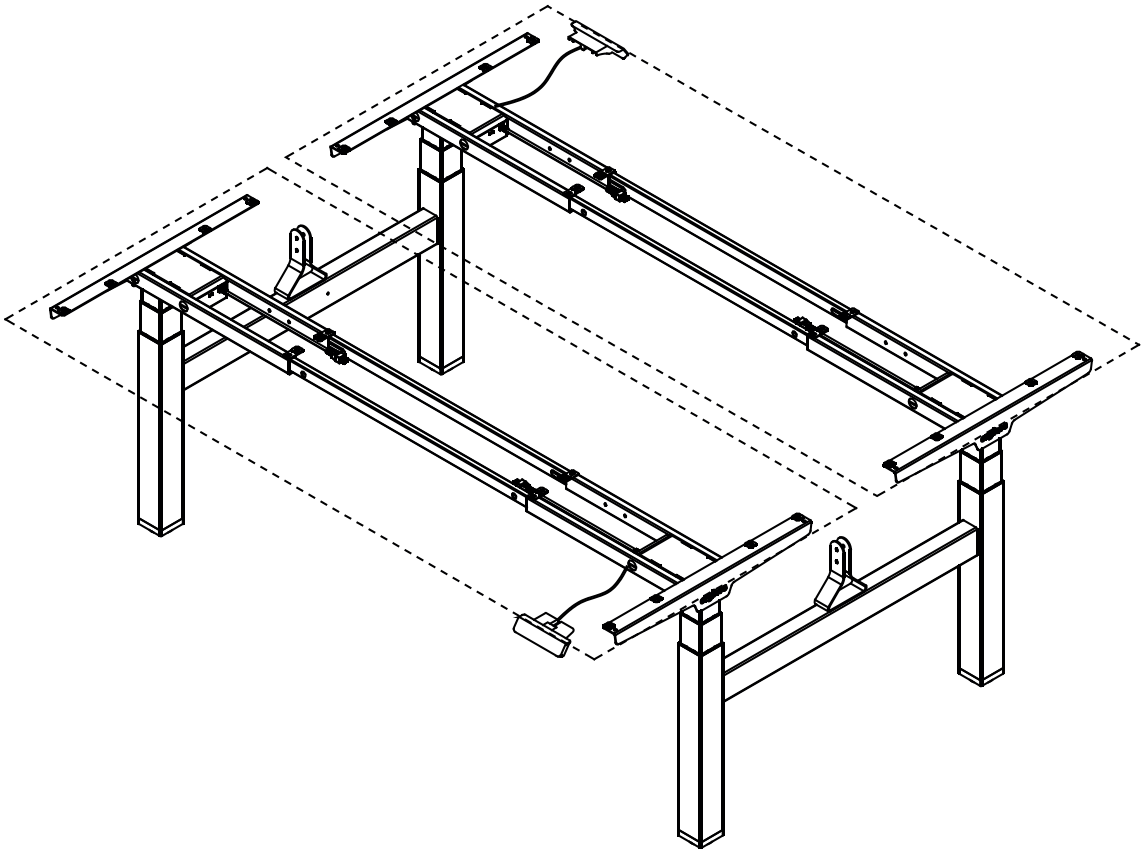

ERGHOS PRO BENCH

NUMBER OF PEOPLE
X2

ASSEMBLY TIME
15 MINUTES

PLEASE ASSEMBLY
ON THE CARPET

SPECIFICATIONS

Elecrtic control part:
Input Voltage:100-240Vac 50/60Hz
Duty cycle:10%MAX 2min on 18min off

Desk frame part:
Dynamic load:120KG
The maximum static load:140KG

⚠ SAFETY WARNING

- Please read this manual carefully before use.
- The product must be connected to the correct power supply.
- For any accessories connected to the control box, the plug type and electrical characteristics must conform to its specifications.
- Indoor use only.
- If the transformer's external cable is damaged and need to be replaced,new accessory will be provided by the manufacturer or its service agent.

INSTALLATION INSTRUCTION

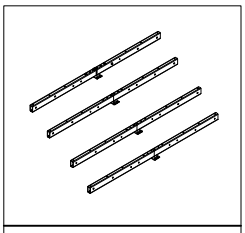

4x Rail Sets

①

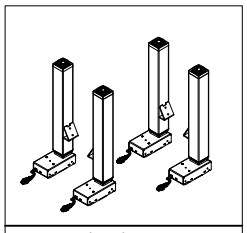

4 x Leg

②

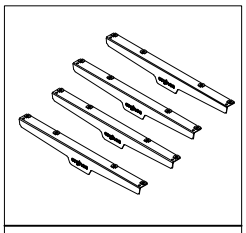

4 x Worktop Support

③

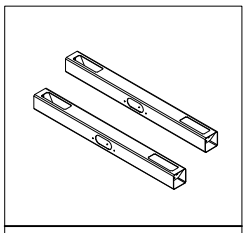

2x Cover plate

④

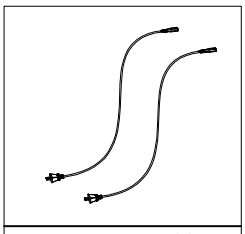

2x Power Cable

⑤

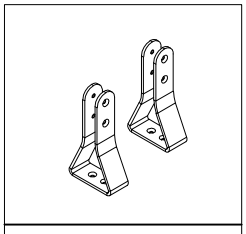

2 x Screen clip

⑥

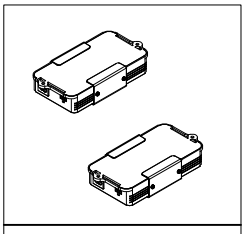

2x Power Supply

⑦

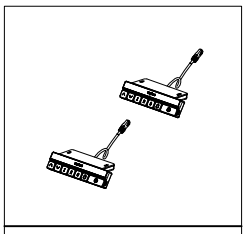

2x Handset

⑧

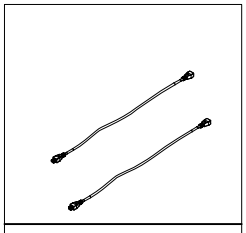

2x Medium Motor Cable

⑨

HARDWARE INCLUDED

A	QTY:16



M6*10

B	QTY:8



M8

C	QTY:4

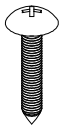

ST3.5*22

D	QTY:4

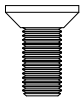

M6*16

D	QTY:16

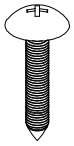

ST5.0*20

E	QTY:8

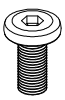

M6*20

F	QTY:8

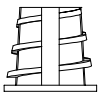

M6

TOOLS INCLUDED



M4



M5



M6

QTY:8

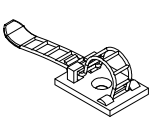

TOOLS REQUIRED

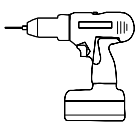

OR

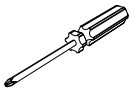

INSTALLATION INSTRUCTION

STEP 1

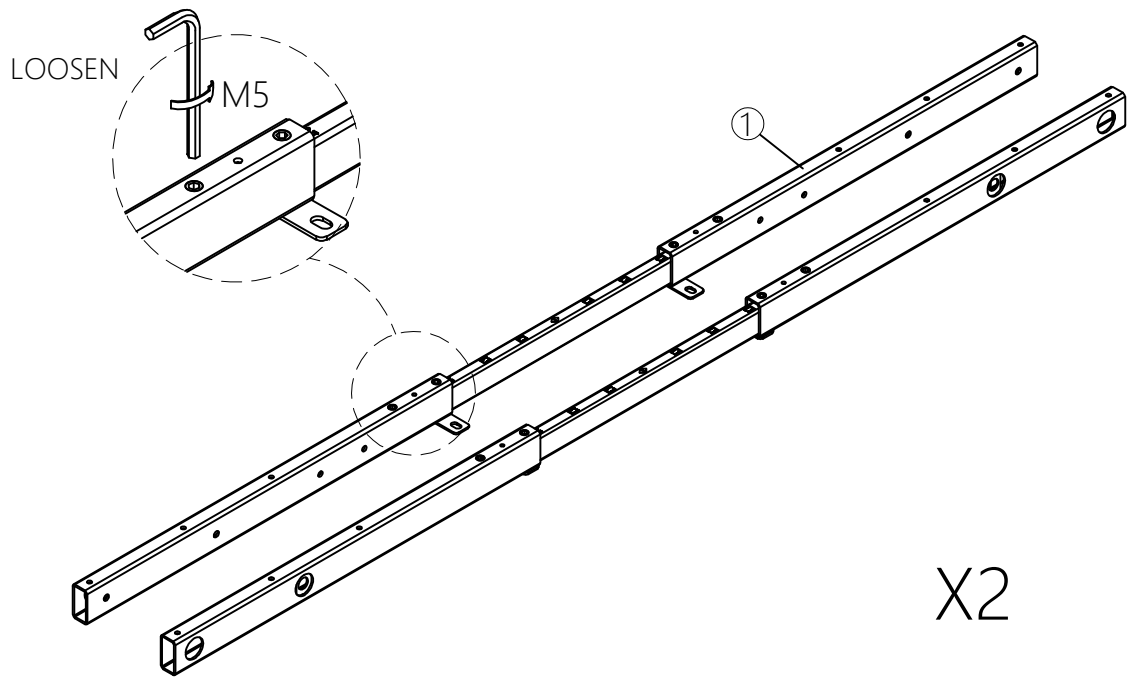

X2

STEP 2

A	QTY:4
	M6*10

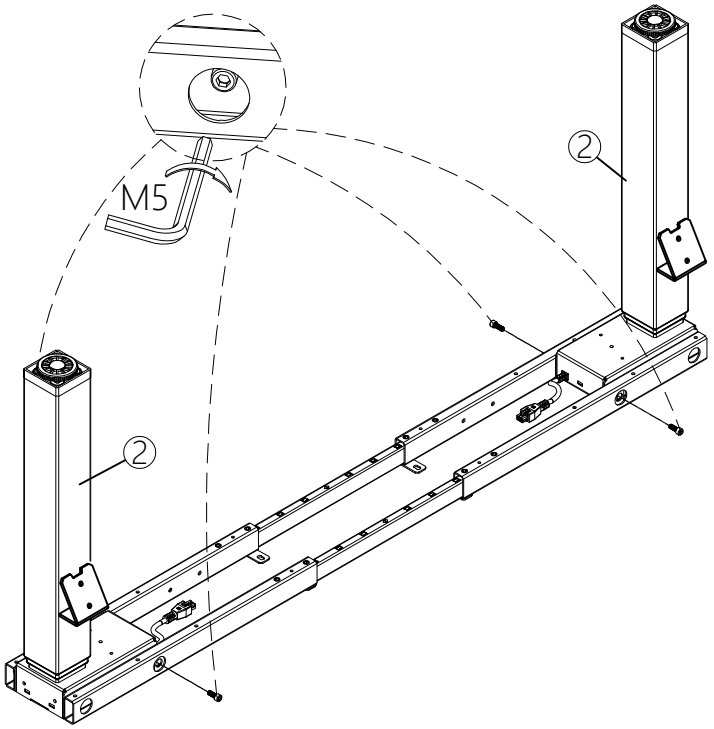

X2

INSTALLATION INSTRUCTION

STEP 3

A	QTY:4



M6*10

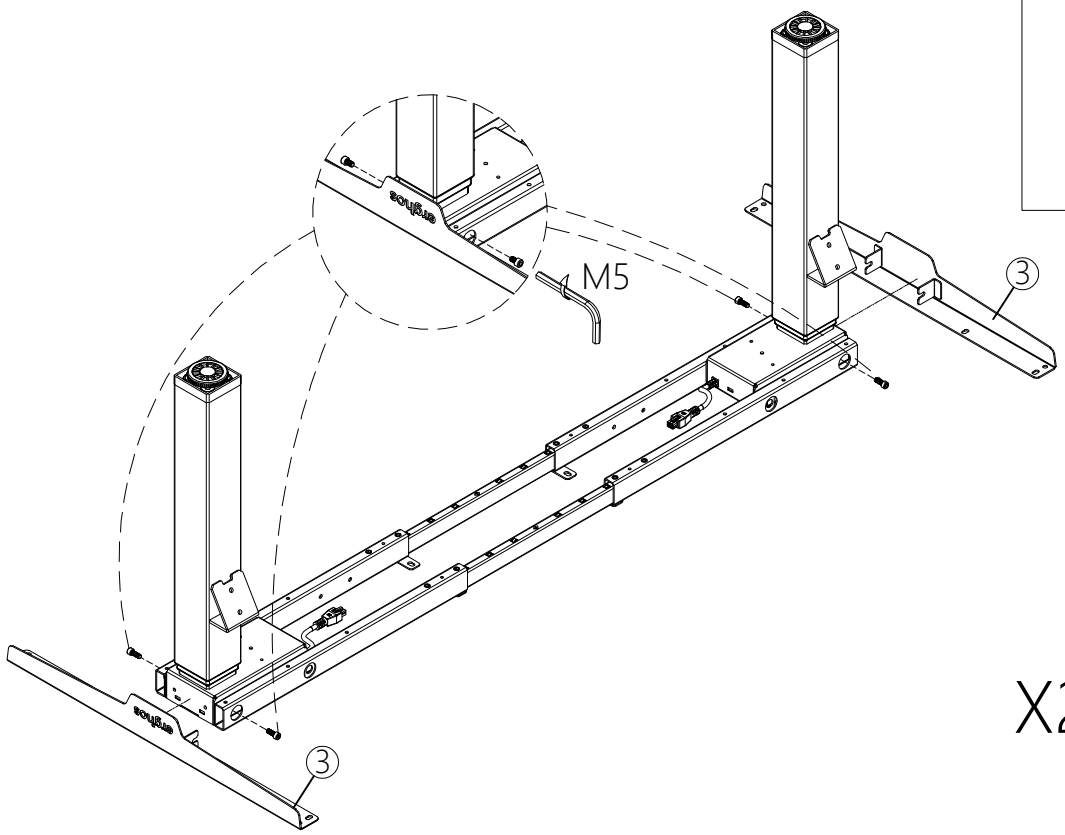

X2

STEP 4

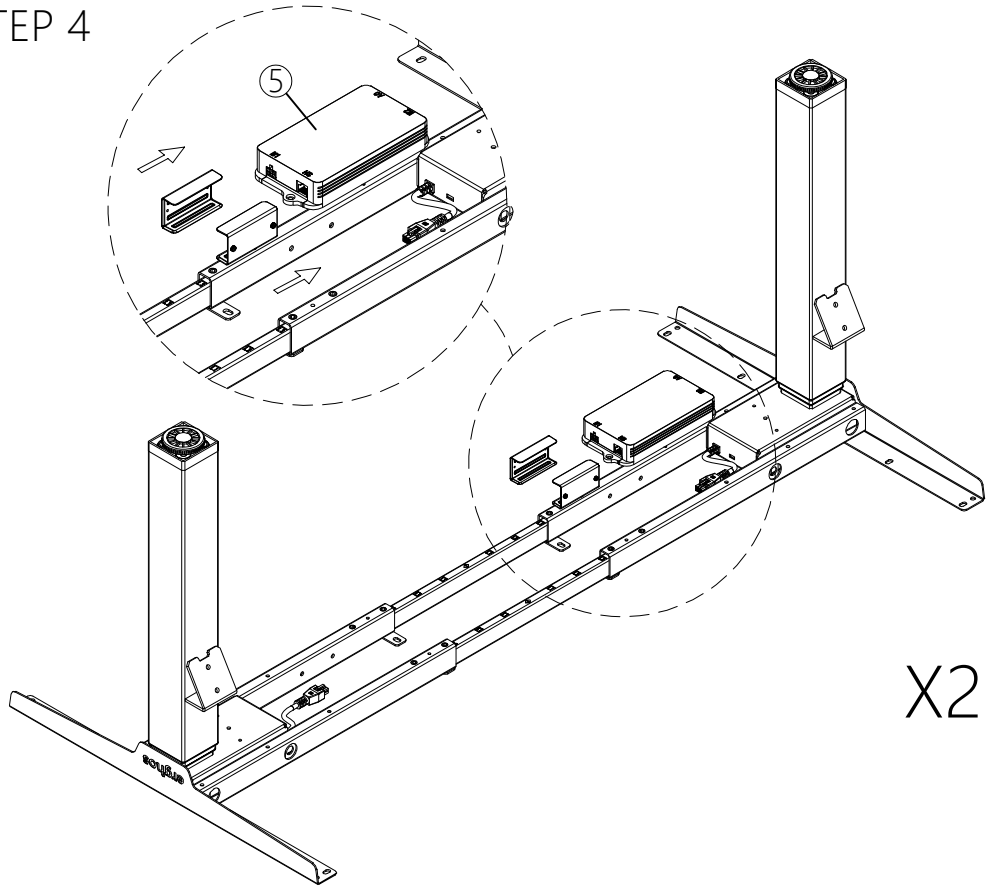

X2

INSTALLATION INSTRUCTION

STEP 5

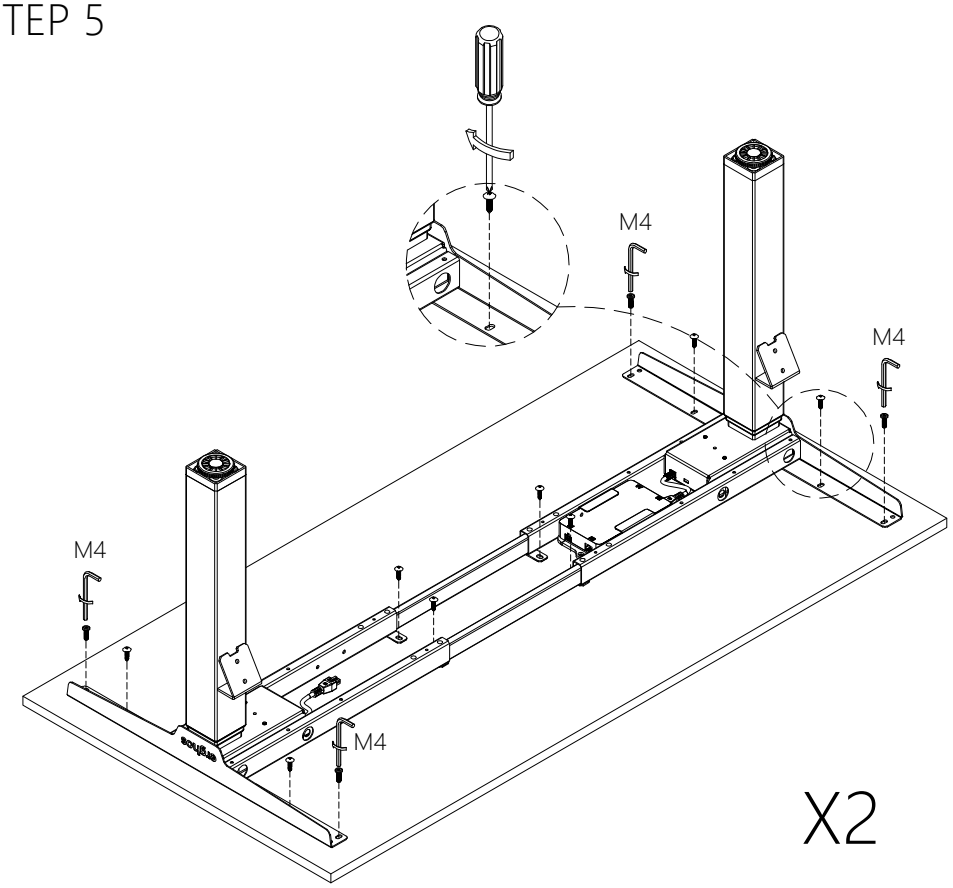

X2

D	QTY:16

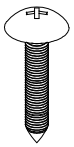

ST5.0*20

E	QTY:8



M6*20

F	QTY:8

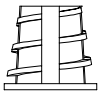

M6

STEP 6

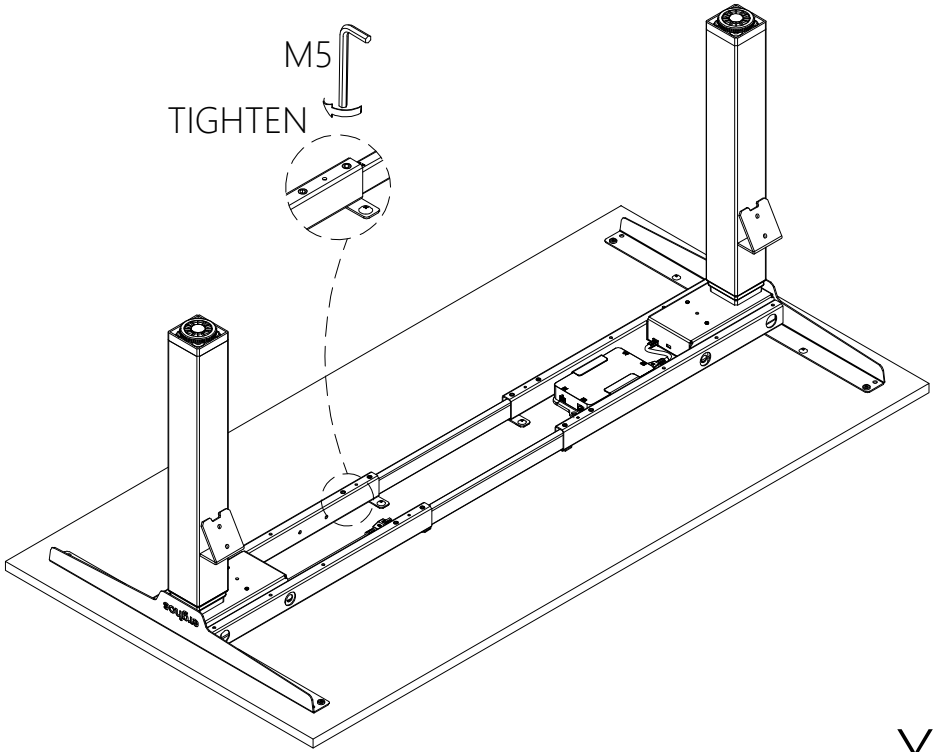

X2

INSTALLATION INSTRUCTION

STEP 7

C	QTY:4

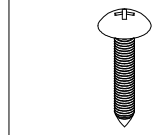

ST3.5*22

X2

STEP 8

B	QTY: 8



M8

INSTALLATION INSTRUCTION

STEP 9

D	QTY:4

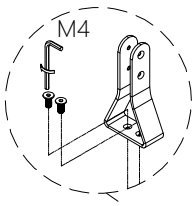

M6*16

STEP 10

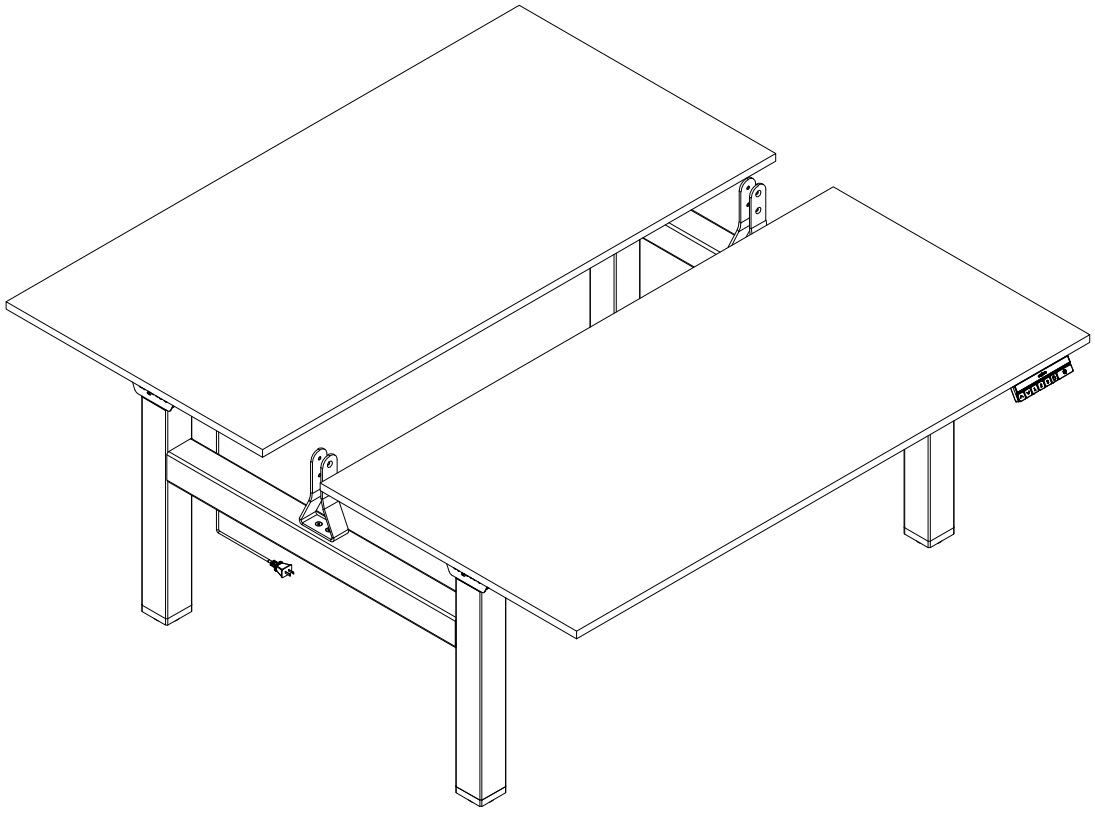

DIRECTIONS FOR USE

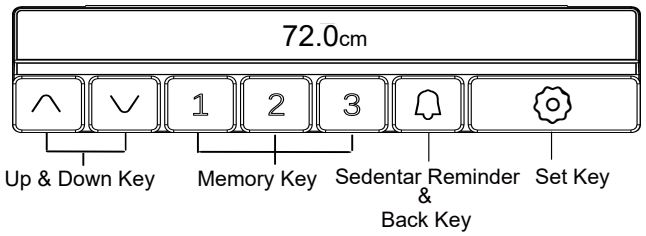

The whole handset surface is a button panel. If there is no press within 10 seconds, The handset enter a dormant state, You should press " ∧" or " ∨" key to wake up , It can be used when the display screen light up.

■ Up & Down:

Please keep pressing "∧" or " ∨" key to adjust desk height until you get an optimum height.

■ Memory Key (1/2/3):

After setting memory keys, The desk can lift automatically to memory height.

※ How to set memory mode:

1.Choose your required height and stop at this position.

2.Press the" ⚙ "key. The display screen displays "S--" . At this time, Press the "1/2/3" key to store the position to the corresponding label,Set success.

3.Then press the "1/2/3" key, The desk moves to memory height automatically.

■ Height Limit:

1.Please keep pressing the "⚙" key for about 5 seconds to enter the menu.

2.Press the " ∧ " or " ∨" key to select the "Height Limit", Then press the" ⚙ "key enter the submenu.

3.Press the " ∧ " or " ∨" key to select the "Highest" or "Lowest".Then press the" ⚙ "key,Set success.

4.If you need to cancel the height limit, Please select the "Clean" .

P.S.

1.If you select a certain point as the highest limit, the desk cannot ascend after reaching that position. If you select a certain point as the lowest limit, the desk cannot descend after reaching that position.

2.If you choose to initialize, The height limit has been lost.

■ Sedentary Reminder:

▲ Enable the Sedentary Reminder:

1.Keep pressing the " 🔔 " key for about 1 second,The reminder time is displayed on the screen, Set successful.

2.If you need to cancel the sedentary reminder,Keep pressing the " 🔔 " key for about 1 second,The reminder time disappears from the screen,Set successful.

3.Modify the reminder time with reference to the "Time of Reminder".

※ How to set:

Keep pressing the "⚙" key for about 5 seconds to enter the menu.

▲ Time Of Reminder:

1.Press the " ∧" or " ∨" key to select the "Reminder", Then press the"⚙"key enter the submenu.

2.Press the " ∧" or " ∨" key to select the "Interval", Then press the" ⚙ "key enter the submenu.

3.Press the " ∧" or " ∨" key to select the reminder time,Then press the" ⚙ "key,Set success.

▲ Frequency Of Reminder:

1.Press the " ∧" or " ∨" key to select the "Reminder", Then press the"⚙"key enter the submenu.

2.Press the " ∧" or " ∨" key to select the "Frequency", Then press the"⚙"key enter the submenu.

3.Press the " ∧" or " ∨" key to select the frequency of reminder,Then press the"⚙"key,Set success.

▲ Type Of Reminder:

1.Press the " ∧" or " ∨" key to select the "Reminder", Then press the" ⚙ "key enter the submenu.

2.Press the " ∧" or " ∨" key to select the "Reminder Type", Then press the" ⚙ "key enter the submenu.

3.Press the " ∧" or " ∨" key to select the method of reminder,Then press the" ⚙ "key,Set success.

■ Safety Setting:

Keep pressing the " ⚙ " key for about 5 seconds to enter the menu.

▲ Longitudinal Tilt Sensitivity Setting:

1.Press the " ∧" or " ∨" key to select the "Safety", Then press the"⚙"key enter the submenu.

2.Press the " ∧" or " ∨" key to select the "Gyrospoce", Then press the" ⚙ "key enter the submenu.

3.Press the " ∧" or " ∨" key to select the level of Sensitivity ,Then press the" ⚙ "key,Set success.

▲ Lateral Tilt Sensitivity Setting:

1.Press the " ∧" or " ∨" key to select the "Safety", Then press the"⚙"key enter the submenu.

2.Press the " ∧" or " ∨" key to select the "Inclination", Then press the" ⚙ "key enter the submenu.

3.Press the " ∧" or " ∨" key to select the level of Sensitivity ,Then press the" ⚙ "key,Set success.

▲ Sensitivity To Upward Resista Setting:

1.Press the " ∧" or " ∨" key to select the "Safety", Then press the"⚙"key enter the submenu.

2.Press the " ∧" or " ∨" key to select the "Up Current", Then press the" ⚙ "key enter the submenu.

3.Press the " ∧" or " ∨" key to select the level of Sensitivity ,Then press the" ⚙ "key,Set success.

▲ Sensitivity To Downward Resistance Setting:

1.Press the " ∧" or " ∨" key to select the "Safety", Then press the"⚙"key enter the submenu.

2.Press the " ∧" or " ∨" key to select the "Down Current", Then press the" ⚙ "key enter the submenu.

3.Press the " ∧" or " ∨" key to select the level of Sensitivity ,Then press the" ⚙ "key,Set success.

DIRECTIONS FOR USE

■ General Setting:

Keep pressing the "⚙" key for about 5 seconds to enter the menu.

▲ Units Of Height Setting:

1.Press the "∧" or "∨" key to select the "General", Then press the" ⚙ "key enter the submenu.
2.Press the "∧" or "∨" key to select the "Unit", Then press the"⚙"key enter the submenu.
3.Press the "∧" or "∨" key to select the "cm" or "in" ,Then press the" ⚙ "key,Set success.

▲ Base Height Setting:

1.Press the "∧" or "∨" key to select the "General", Then press the"⚙"key enter the submenu.
2.Press the "∧" or "∨" key to select the "Base Height".Then press the" ⚙ "key enter the submenu.
3.Press the "∧" or "∨" key to select the optimum height.Set success.

P.S.The base height is applicable to tabletop with a thickness of 2.5 cm. You can freely select the display height according to the varying thicknesses of tabletops.

▲ Time protect:

1.Press the "∧" or "∨" key to select the "General", Then press the" ⚙ "key enter the submenu.
2.Press the "∧" or "∨" key to select the "Time protect", Then press the" ⚙ "key enter the submenu.
3.Press the "∧" or "∨" key to select the "ON" or "OFF",Then press the"⚙"key,Set success.

OFF: Overheat protection function turned off.

※ Important Reminder: When disabling this function. Do not operate it for an extended period.Prolonged operation may cause the motor to overheat and be damaged, Such damage is not covered by the warranty.

On: Continuous operation for two minutes, Error HOT.

▲ Language:

1.Press the "∧" or "∨" key to select the "General", Then press the" ⚙ "key enter the submenu.
2.Press the "∧" or "∨" key to select the "Language", Then press the"⚙"key enter the submenu.
3.Press the "∧" or "∨" key to select the language,Then press the"⚙"key,Set success.

■ Initialization:

▲ The Screen Displays "Hold Down To Reset" :

When"Hold Down To Reset "is on the display screen, Please keep pressing the "∨" key the desk frame reaches its lowest point. After the display screen shows numbers and desk frame rebounds, Initialization is completed.
(P.S. The key cannot be released during this operation, Otherwise the initialization will fail).

▲ Forced Initialization:

1.Please keep pressing "∨" key until the desk frame reaches its lowest point, Then Release it.
2.Please keep pressing "∨" key again for about 5 seconds until the "Hold Down To Reset" on the display screen and then the numbers are shown again, At the same time desk frame rebounds, The initialization is completed.

▲ Reset All Setting(Restore the factory settings):

1.Keep pressing the "⚙" key for about 5 seconds to enter the menu.
2.Press the "∧" or "∨" key to select the "General", Then press the" ⚙ "key enter the submenu.
3.Press the "∧" or "∨" key to select the "Reset All", Then press the" ⚙ "key enter the submenu.
4.Press the "∧" or "∨" key to select the "YES" or "NO".
5.If you select the "YES",Press the" ⚙ "key,The screen displays "Hold Down To Reset",Then perform initialization.
(P.S.If you select "Reset All", all the set items will be cleared to the factory settings.

■ Lock And Unlock:

Keep pressing the " ∧ " and "⚙" keys for 5 about seconds.The "🔒" appears on the screen,Set success.
Keep pressing the " ∨ " and "⚙" keys for 5 about seconds.The "🔒" on the screen disappears,System unlocked.

■ Lighting settings:

Press the "🔔" and " ⚙ " keys to activate the lighting mode.The screen displays " Lamp status toggle ",Then press the " ∧ "or " ∨ " key to switch lighting effects.Press the " ⚙ " key,Set success.

off: Turn off
Multicolored: Multi-color light
Monochrome: Single-color light

■ Setting The Anti-Collision Sensitivity:

For safety reasons, The height adjustment stops and moves back slightly when it encounters an obstacle. This rebound mechanism is triggered in sensor mode and current detection mode. These two modes complement each other to enhance the product's safety performance. However, If the sensitivity is set too high, This function may be triggered undesirably. If the function is triggered too often, You can reduce sensitivity.

Gyroscope ∧/∨
- OFF shut down
- level 1 The most insensitive
- level 8 The most sensitive

Inclination ∧/∨
- OFF shut down
- level 1 The most sensitive
- level 8 The most insensitive

Up Current ∧/∨
- OFF shut down
- level 1 The most insensitive
- level 8 The most sensitive

Down Current ∧/∨
- OFF shut down
- level 1 The most insensitive
- level 8 The most sensitive

■ Handset Shows Error Code And Solution：

Error code	Fault Cause	Solution
E01, E02, E04, E06, E12, E22, E15, E25, E17, E27, E42, E43	Hardware abnormality	Contact the manufacturer for handling
E05	Obstacle rebound	Remove the obstacle
	Too high sensitivity	Reduce the sensitivity (see setting function)
	Gyroscope is triggered	Fix the control box
E07	Ineffective plug insertion	Re-plug the plug
	Overload	Reduce the desk load
E08	Too high sensitivity	Reduce the sensitivity (see setting function)
	Gyroscope is triggered	Fix the control box
E11, E13, E21, E23	Abnormal connection between motor and control	Ensure correct connection
	Hardware abnormality	Contact the manufacturer for handling
E14, E24	Abnormal connection between motor and control box/Handset	Re-plug the motor wire
	Overload	Hardware abnormality
	Exceed the operation stroke	Perform factory settings (see the 3rd point of initialization)
	Hardware abnormality	Contact the manufacturer for handling
E16, E18, E26, E28	Overload	Reduce the desk load
	Exceed the operation stroke	Perform factory settings (see the 3rd point of initialization)
	Hardware abnormality	Contact the manufacturer for handling
Hot	Over-frequency operation	Stop operating for 18 mins then it will recover automatically
Hold Down To Reset	Reset signal	Perform the reset operation (see initialization)
Not connected	The connection of the hand controller and the control box is abnormal.	Reconnect the control box and the Handset.

Have any questions, Please contact us.



V1